THE INFORMATION CONTAINED IN THIS DRAWING IS THE SOLE PROPERTY OF NATIONAL PRODUCTS INC. ANY REPRODUCTION IN PART OR WHOLE WITHOUT THE WRITTEN PERMISSION OF NATIONAL PRODUCTS INC. IS PROHIBITED.

REVISIONS

REV.	DESCRIPTION	DATE	APPROVED

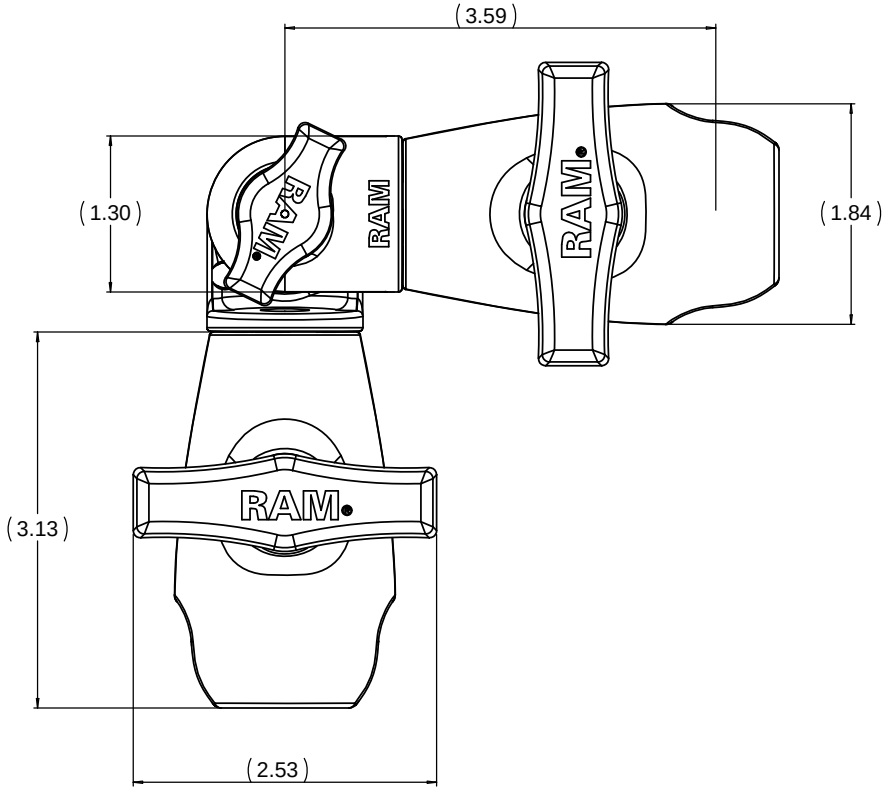

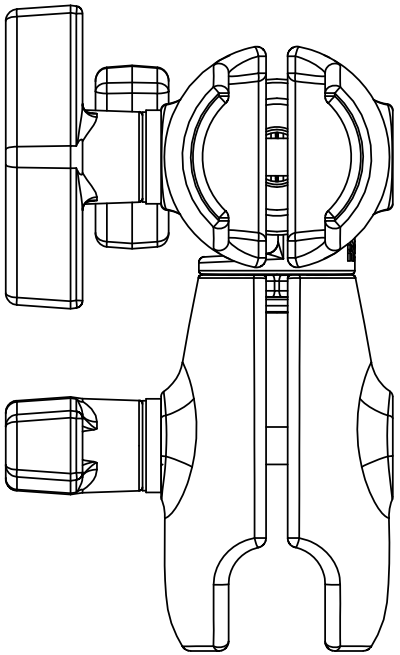

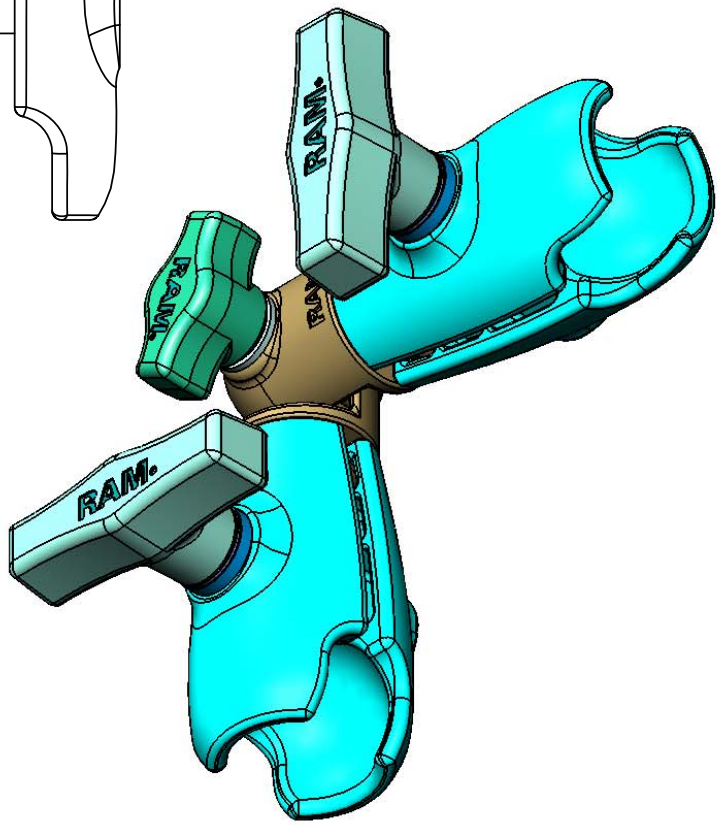

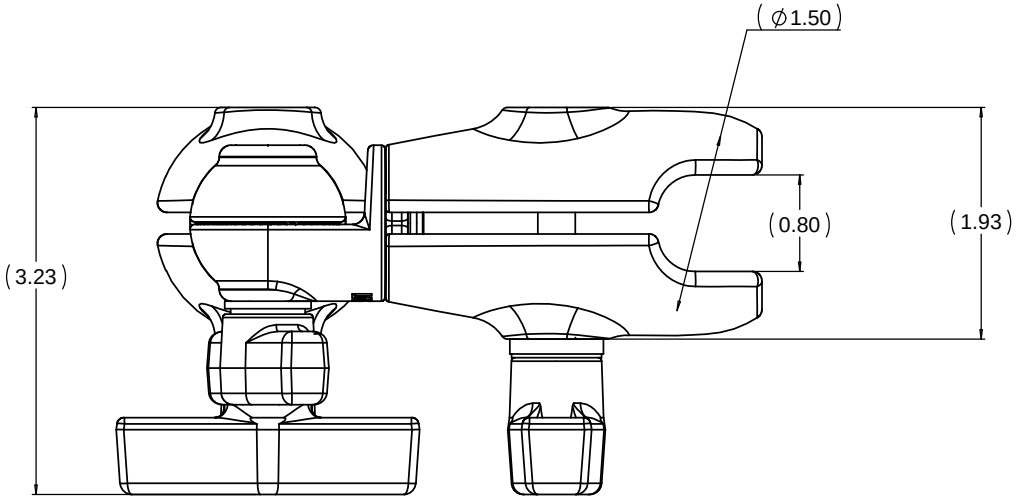

UNLESS OTHERWISE SPECIFIED DIMENSIONS ARE IN INCHES TOLERANCES ARE: FRACTIONS DECIMALS ANGLES + - 1/32 .XX+ - .06 + - 1 DEG. .XXX+ - .030	CAD GENERATED DRAWING. DO NOT MANUALLY UPDATE		NATIONAL PRODUCTS INC.
MATERIAL PLASTIC, BRASS, STST	APPROVALS	DATE	RAM DOUBLE 1 1/2" SOCKET ARM WITH SWIVEL AND OCTAGON BUTTONS
FINISH BLACK	DRAWN JDC	06/06/15	
DO NOT SCALE DRAWING	CHECKED CMR	06/06/15	SIZE C DWG. NO. RAP-200-2 REV.
	RESP ENG		
	MFG ENG		
	QUAL ENG		SCALE 1 TO 1 CAD FILE: RAP-200-2 SHEET 1 OF 1